marlec
Renewable power solutions

Let's get Started

Adjustable Solar Rail Mount

User manual

Marlec | CA-12/44 | Jan-2025

Adjustable Solar Rail Mount

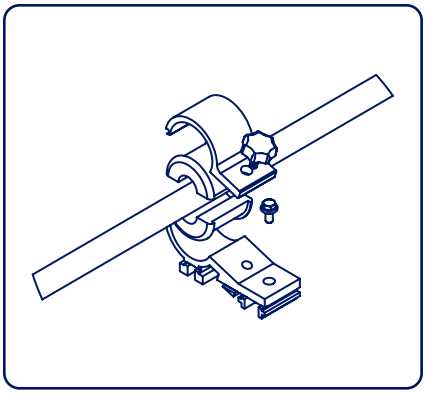

1. Introduction

Welcome to the future of boat-mounted solar panel systems. Marlec proudly introduces the revolutionary Adjustable Solar Rail Mount—engineered for an effortless solar panel installation on your boat. Designed with robust materials, this innovative mount ensures durability, stability, and versatility for marine applications.

Whether you're a seasoned boater or new to the waters, this manual will guide you through the simple steps to secure and optimize your mount for peak solar performance.

2. Tools and Materials Required

What You'll Need

- Screwdriver
- Hacksaw
- Adjustable wrench or spanner
- Cleaning cloth and marine-grade surface cleaner
- Framed Solar Panel (up to 775 mm in height)
- Safety glasses and gloves

What's Included in the Kit

- Aluminum mounting rails x2
- Adjustable clamps with 2 different rubberized grip sizes (22 & 25mm diameter)
- Bolts, nuts, and washers (stainless steel, marine-grade) for clamping mechanism

Double-check that all components are present before beginning. Contact Marlec support if any items are missing.

3. Safety Instructions

General Warnings

Ensure the boat is docked and stable before installation.

4. Preparing for Installation

1. Choosing the Right Location

Identify a rail on your boat about 50 mm diameter.Ensure the location receives ample sunlight and avoids shadows from the mast or other structures.

2. Cleaning and Preparing the Area

For longevity, use a cloth and spray cleaner to remove any debris, grease, or salt buildup from the mounting area.

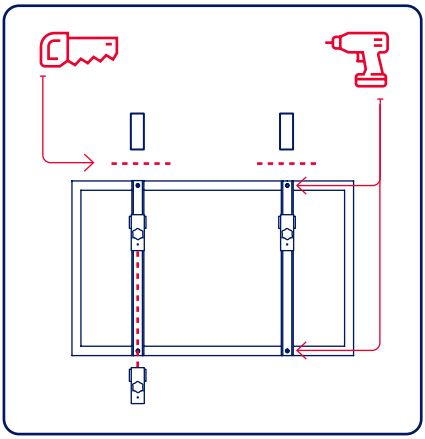

5. Step-by-Step Installation Process

1 Assembling the Clamping Mount

Attach the mounting rails to the Solar Panel Aluminium Frame using the provided bolts/washers and a drill.

2 Remove the excess rail size

Using a hacksaw cut the excess rail making it flush with the solar panel frame.

3 Positioning and Attaching the Clamps

Secure the clamps onto the boat rail (use the appropriate size rubber) and hand tighten the knob.

4 Slide the clamps onto the Rail

Position the clamps evenly along the rails for optimal stability and tighten the clamp bolt onto the rail using an M10 spanner until the panel is fixed.

5 Final Adjustments and Checks

Ensure the mount is securely fastened and the solar panel remains at an angle for optimal solar exposure.

7. Troubleshooting

Common Issues and Solutions

Loose Clamps: Re-tighten bolts or replace damaged rubber grips.

Panel Misalignment: Loosen the clamp slightly and realign before re-tightening.

8. Maintenance and Care

Routine Maintenance

- Check for corrosion or wear on bolts and clamps after exposure to saltwater.
- Reapply anti-corrosion lubricant to metal parts annually.
- Wipe down the mount with fresh water after every trip to prevent salt buildup.
- Use a non-abrasive cloth to clean solar panels for maximum efficiency.

9. Warranty and Support

Marlec stands by the quality of its products. Your Adjustable Solar rail mount comes with a **1-year warranty** against manufacturing defects. Should you encounter any issues, please reach out to our customer support team at:

Phone: +44 (0)1536 201588
Email: support@marlec.com
Website: www.marlec.com

We hope this manual has been helpful and that your new mount exceeds expectations.

Happy boating!

Marlec Renewbles

Rutland House, Trevithick Road,
Corby Northamptonshire, NN17 5XY

www.marlec.co.uk
01536 201588
Sales@marlec.co.uk

marlec
Renewable power solutions