KIT X1, Ref. 72037:

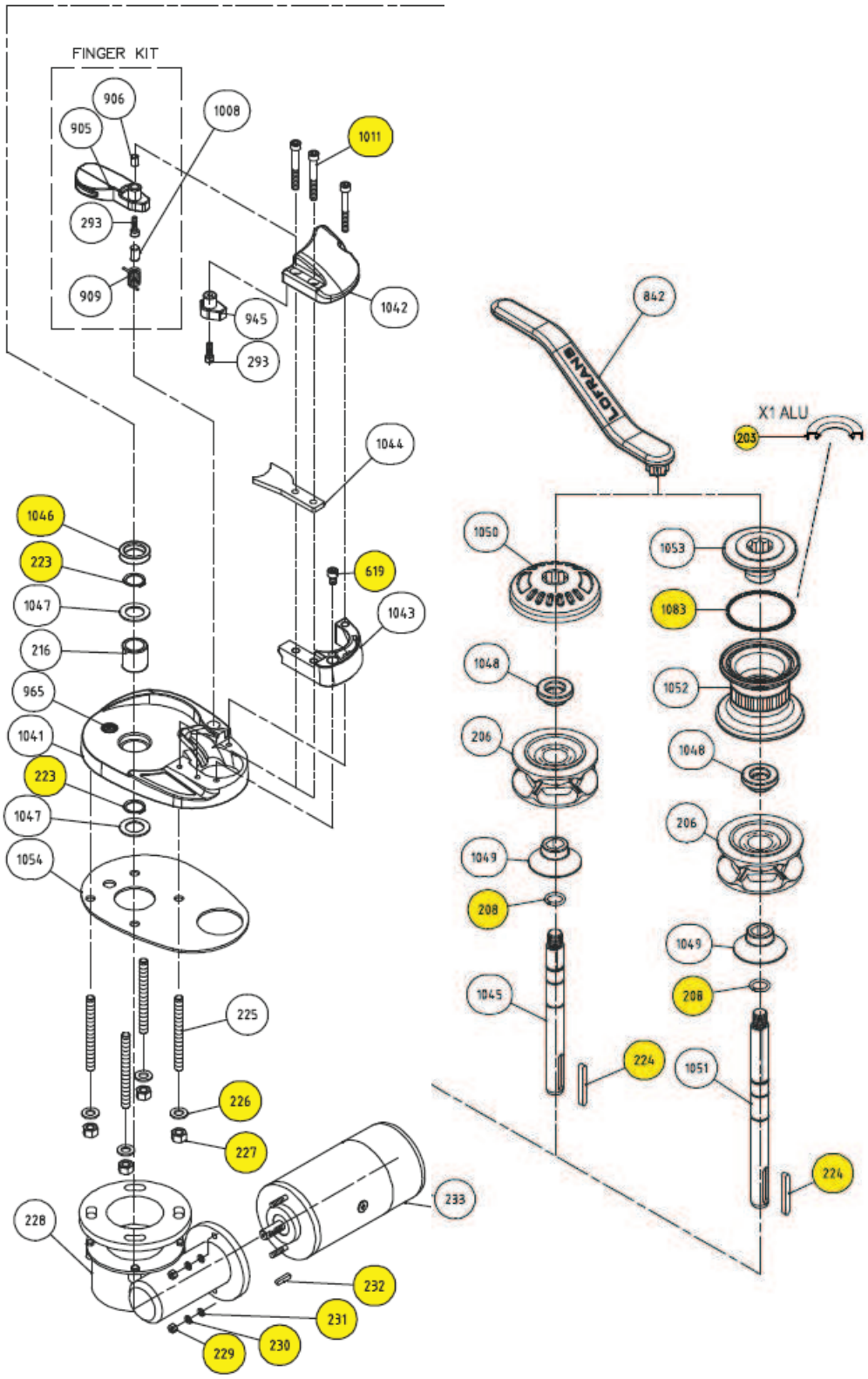

Spare Parts Included:

1046 x 1
1011 x 3
619 x 1
223 x 2
226 x 4
227 x 4
229 x 2
230 x 2
231 x 2
232 x 1
203 x 1
224 x 1
1083 x 1
208 x 1