Kit KOBRA, Ref. 72048:

CAYMAN

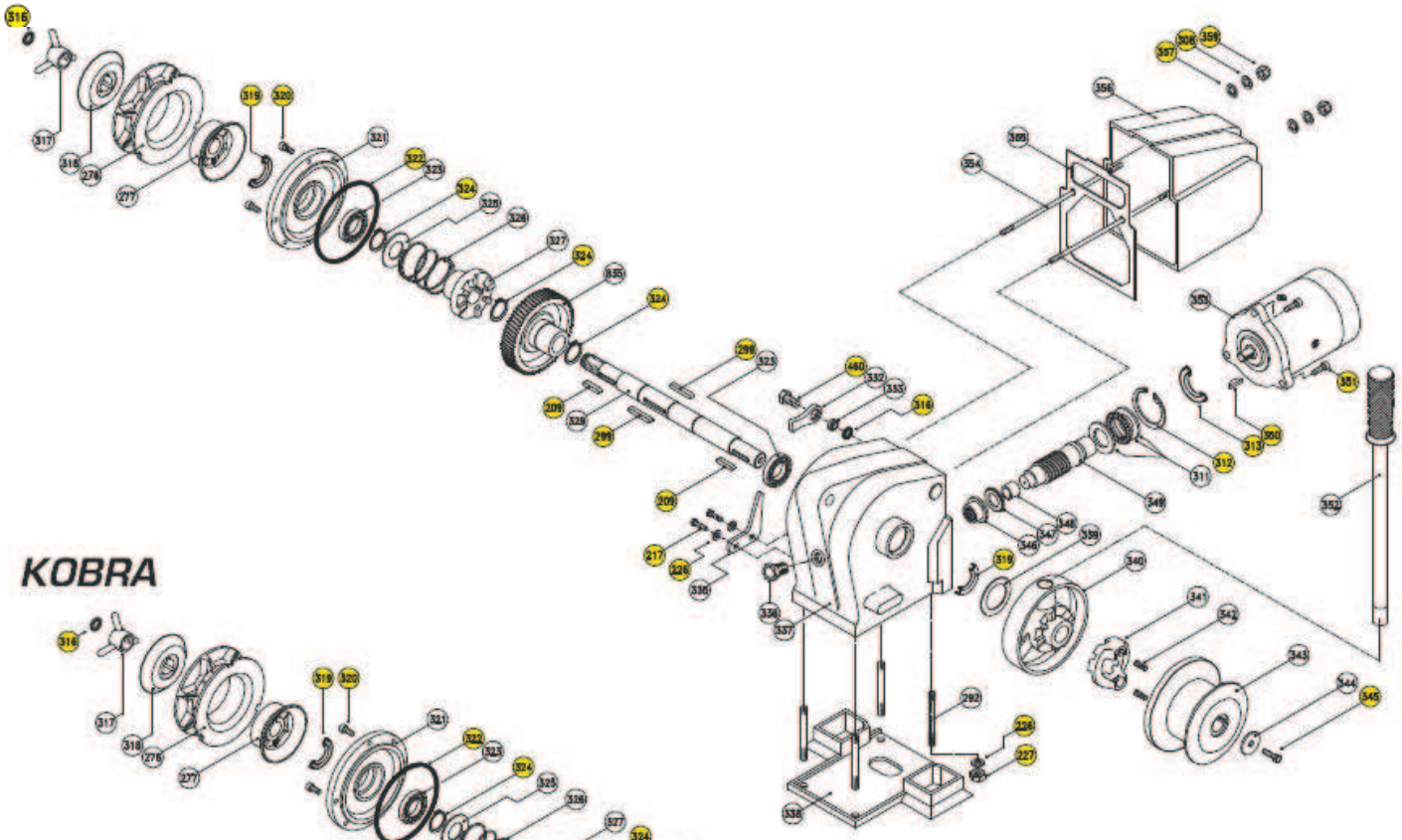

KOBRA

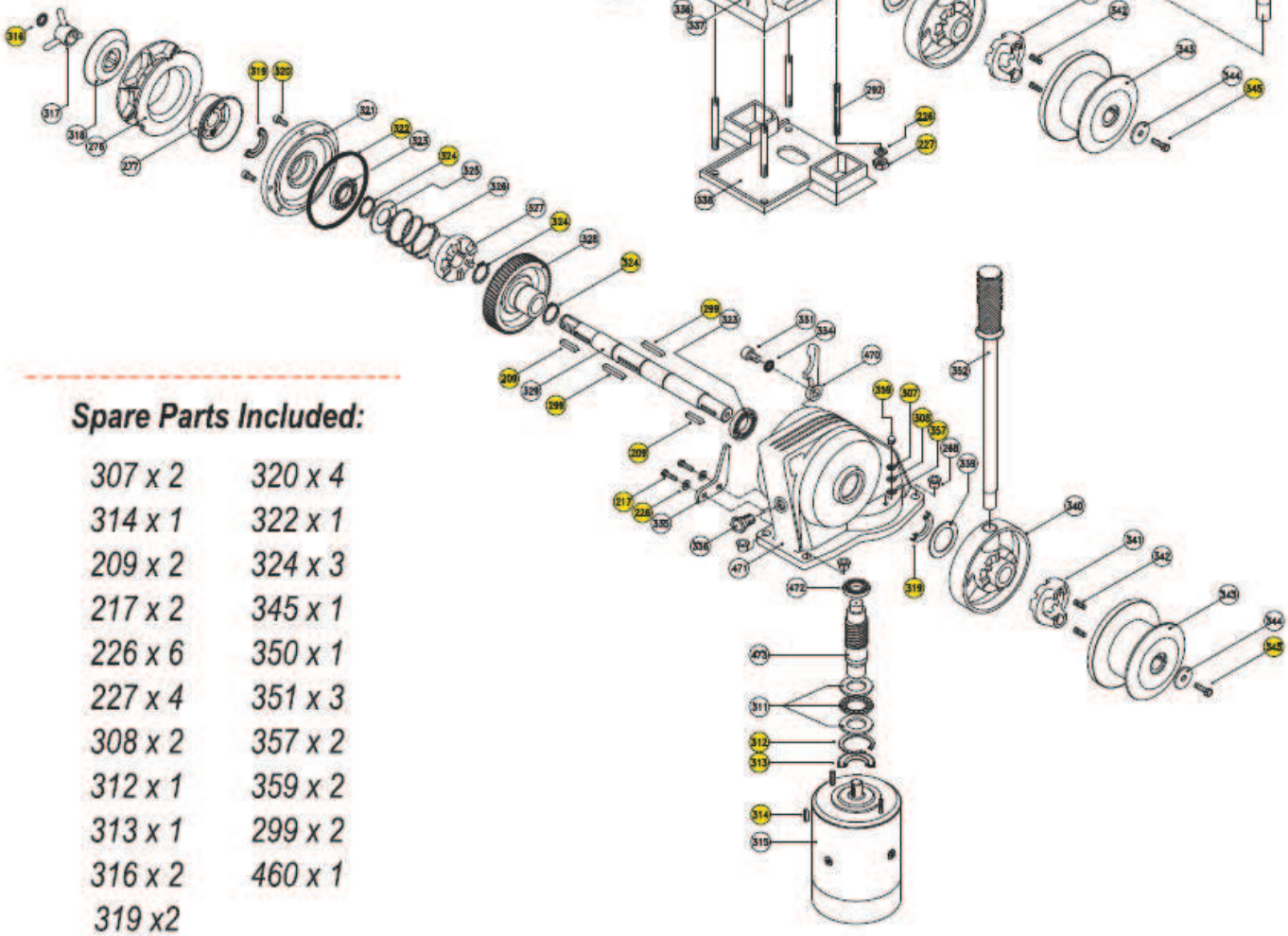

Spare Parts Included:

307 x 2	320 x 4
314 x 1	322 x 1
209 x 2	324 x 3
217 x 2	345 x 1
226 x 6	350 x 1
227 x 4	351 x 3
308 x 2	357 x 2
312 x 1	359 x 2
313 x 1	299 x 2
316 x 2	460 x 1
319 x2	