LED Marine Light

Instruction

Installation

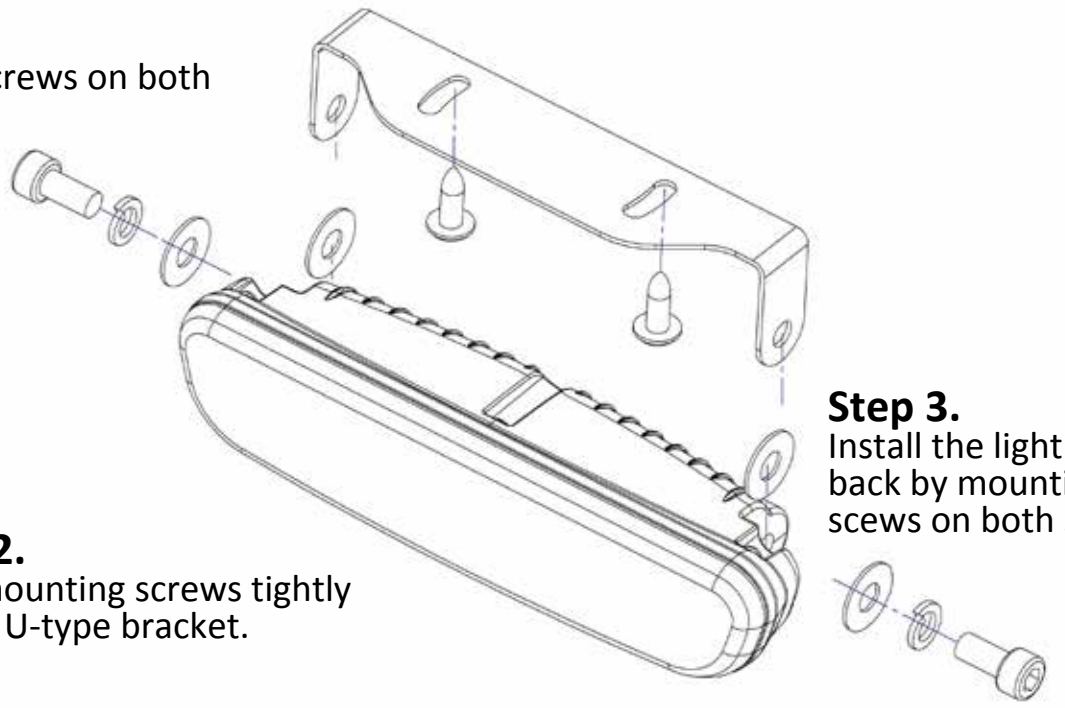

Step 1.
Loosen screws on both sides.

Step 2.
Lock mounting screws tightly on the U-type bracket.

Step 3.
Install the light fixture back by mounting scews on both sides.

Wiring

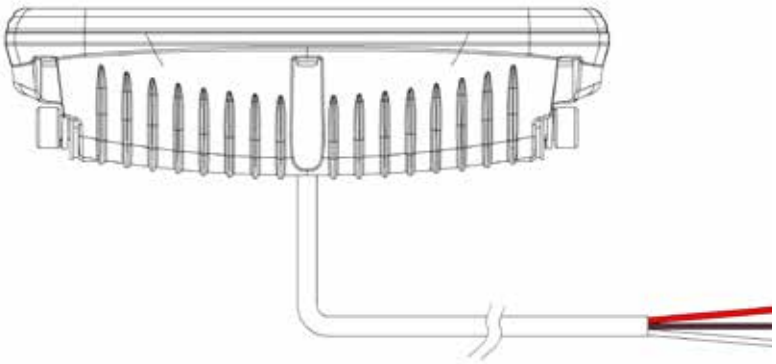

100% Brightness

Red
Attach the RED wire marked positive (+) on unit to the positive wire (+) coming from power supply of 12/24v DC.

White
Attach the WHITE wire marked negative (-) on unit to the negative wire (-) coming from power supply of 12/24v DC.

70% Brightness

Red/Brown
Attach the BROWN and RED wires marked positive (+) on unit to the positive wire (+) coming from power supply of 12/24v DC.

White
Attach the WHITE wire marked negative (-) on unit to the negative wire(-) coming from power supply of 12/24v DC.